ARF13 MODEM USER GUIDE

A PRESENTATION

A.1 DESCRIPTION
A.2 OPERATION
A.3 DISPLAY

B SERIAL LINK COMMISSIONING

B.1 CONNECTION TO TERMINAL
B.2 CONFIGURATION

C RECOMMENDATIONS FOR USE

D TIMING DIAGRAMS

E MECHANICAL DEFINITION

F TECHNICAL DATA

JNOd / 092002
Version 3.0

ADEUNIS R.F. 283 rue Louis Néel 38920 CROLLES FRANCE

Tel. : +33 (0) 4 76 92 01 62 - Fax : +33 (0) 4 76 08 97 46 www.adeunis-rf.com

DECLARATION OF CONFORMITY

according to ISO/IEC Guide 22 and EN45014

Manufacturer's name: ADEUNIS R.F.

Manufacturer's address: Parc technologique PRE ROUX IV
283 rue Paul Louis NEEL
38920 CROLLES - FRANCE

declares that the product

Product Name: ARF13
Product Number(s): ARF6513C
Product options:

conforms to the RTTE Directive 99/5/EC :

EMC : conformity is proven by compliance to the standard EN 301489 according to the requirements of EMC Directive 89/336/EEC.

Safety : conformity to the standard EN 60950 according to the requirements of Low Voltage Directive 73/23/EEC.

Radio : conformity is proven by compliance to harmonized standard EN 300220 covering essential radio requirements of the RTTE directive. .

Notes :
- Conformity has been evaluated according to the procedure described in Annex III of the RTTE directive.
- The use of the spectrum is harmonized by the fact that the product never falls in one of the restrictions listed in appendix 3 (Annex 1, band E) of the CEPT recommendation 70-03.
- Receiver class (if applicable) : 2.

Crolles, April 4th, 2001

VINCENT Hervé / Quality manager

A - Presentation

Frequency: 433/434 MHz according to European RTTE directives.
It enables a wireless asynchronous link to be achieved over several hundred metres.

Purpose: replacing the standardised RS232 connecting cable between two DTE terminals equipped with a single modem.

Applications: automatic control system and field networks. Transmission of commands, measurements or alarms between acquisition systems, control systems, robots, machine tools, etc... Communication between mobile equipment.
Connection (signals, power supply) via a screw terminal block.

A.1 DESCRIPTION

⇒ **Versions**

- Daughter board with +/- 12V RS232 link: (ARF6513A).
- Daughter board with 0/5V RS232 link: (ARF6513B).
- IP65 complete enclosure with +/- 12V RS232 link: (ARF6513C).

⇒ **Accessible connectors.**

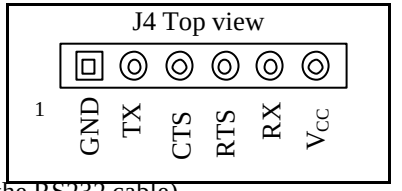

- **J4: Serial link transfer: SIL6.**

There are the following signals on this connector:
–RTS (output flow control input),
–CTS (input flow control output),
–TX (data received by the radio, transmitted on the RS232 cable)
–RX (data received on the RS232 cable, transmittedby the radio)
–GND
–VCC (***Careful this is the ARF6513A modem board 5V regulator output***).

- **J5: Low power supply: SIL2**

There are the following power supply signals on J5:
–+Alim (5V regulator input)
–GND

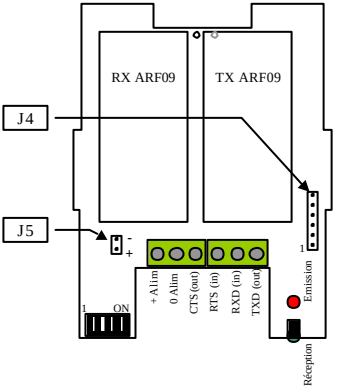

⇒ **Power supply voltage 6V. < +V < 25V.**

NB: for the ARF6513A version , the power supply can be reduced to **5.5V** if power supply is not via the connector J5.

ARF6513B version, there is no 5V regulator, power supply is performed via the connector J4 only, between the Vcc and GND pins: supply voltage = **5V±5%**

A.2 OPERATION

The ARF6513 modem receives data via its serial link and stores them to constitute a radio frame of **27 bytes a maximum of 24 of which are useful**.
This frame starts with a wake-up of the distant receiver and a synchronisation pattern.
On receipt, the bytes are transmitted over the serial link to the DTE with the start and stop bits, or stored if the RS232 link is suspended.
The modems only control the flow on their serial link, not on the radio channel.
The DTE/Modem serial links can be full-duplex, but it is recommended to configure them in half-duplex. The radio link can only be half-duplex.

A.3 DISPLAY

The ARF4013 modem is equipped with 2 leds.
Red led: radio frame transmission
Green led: correct decoding of a radio frame.

B - Commissioning

B.1 CONNECTION TO TERMINAL:

Connection of the modem to the master device by a **straight RS232 cord** (Cf. diagram below).
The signals DCD, DTR and DSR are connected to one another by the modem.
The signal RI is not processed by the modem.

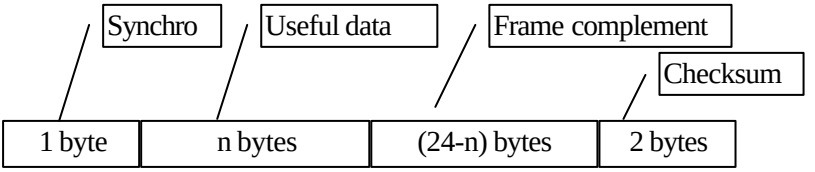

The ARF6513 modem comprises an integrated “null” modem enabling a straight cable to be used.
Crossing of the wires RD and TD, RTS and CTS, if the device on which the modem is connected also has an integrated “null” modem.

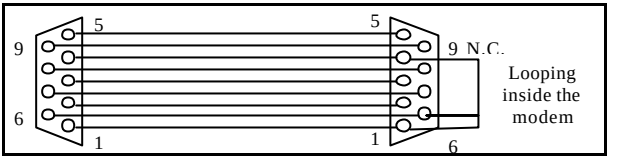

The ground of the signals (5) is indispensable on each wired connection.

Connection between SubD9 and SubD25

DB9 N°	*DB25 N°*	*Signal*	*Name*
1	8	DCD	Carrier detection.
2	3	RD	Data input.
3	2	TD	Data output.
4	20	DTR	Terminal ready.
5	7	GND	Signal reference.
6	6	DSR	Transmission ready.
7	4	RTS	Request to transmit.
8	5	CTS	Receipt possible.
9	22	RI	Buzzer indicator.

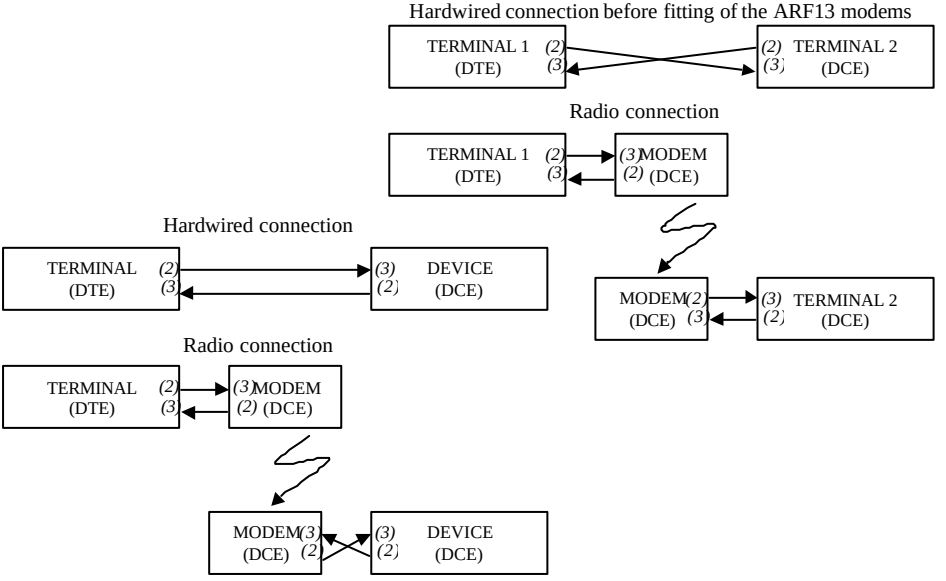

B.2 CONFIGURATION:

•**Switches:** for setting the parameters of the interface between the serial link and the ARF6513 modem
•**Configuration** of the devices using this link:

–8 data bits, no parity, 1 stop bit,
–7 data bits, parity, 1 stop bit.

•**Switches 1 and 2**: speed on the serial link

Switch 1	*Switch 2*	*Speed*
ON	ON	1200
ON	OFF	2400
OFF	ON	4800
OFF	OFF	9600

•**Switches 3 and 4** : type of flow control on the serial link

Switch 4	*Switch 3*	*Speed*
ON	ON	Position prohibited
ON	OFF	RTS / CTS
OFF	ON	Xon / Xoff
OFF	OFF	no control

Notes:
When present, the parity bit (even, odd, mark or space) is not managed, it is transmitted from one DTE to the other like any other character bit.
All the radio network terminals must have the same configuration on their serial port.
To adapt the modems to computers working at different processing speeds the data flow has to be controlled.

There are two flow management modes if flow control is required

- **RTS/CTS for hardware flow management.**

Hardware management strongly recommended in case of data transfer where the characters Xon (11h) and Xoff (13h) may occur.
In RTS/CTS mode, the RTS circuit (modem input) indicates that the terminal is ready to exchange data. The CTS circuit (modem output) serves the same purpose for the modem.

- **XON/XOFF for software management.**

Software management does not require wiring of the RTS and CTS circuits and enables a 3-wire cable (TD, RD, GND) to be used.

Use of the RTS / CTS signals

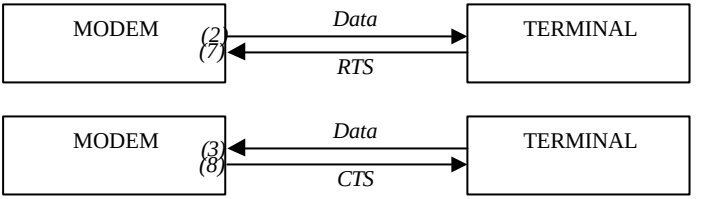

Use of the X_{ON}/X_{OFF} characters

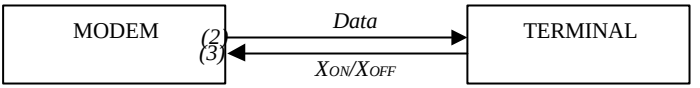

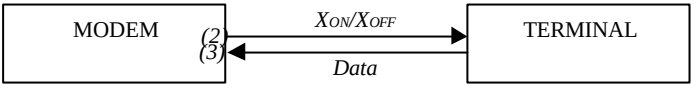

In XON/XOFF mode the control characters are transmitted on the data circuit.

– XOFF: input data flow interrupt
– XON: communication resumption.

The flow management mode must be the same between the modem and the data source.

- In **no flow control** mode**:**

data management must be performed by breakdown into packets of 24 bytes.

- In **flow control** mode**:**

the modem stops the flow (CTS low or Xoff sent) when 2/3 of its input buffer are occupied. This is to anticipate the inertia of the terminal to stop sending of data. Authorisation to resume transmission of characters (CTS high or Xon sent) is given to the terminal when the radio frame has been transmitted by the modem.

C Recommendations for use.

- **Minimum distance between 2 modems** : 3 metres.

- **Antenna:** rigid wire 165 mm long to be soldered onto the modem connector marked “ANT”.

- **Communication protocol**

The ARF6513 modems only perform layer 1 of the description of the OSI 7-layer model.
Management of the link remains up to the DTE. The application part must integrate the communication protocol.

Function:

- Detection of data loss in the channel.
- Management of breakdown of the messages into packets of 24 bytes maximum. It is not necessary to add padding characters to complete a frame.

- **Possible multipoint links**. The transmitter making a general transmission to all the receivers, the caller and recipient have to be identified by addresses.

- **Polling protocol**

- **Function:** to define accesses to the channel.
- **Principle**: Distribution of communication time on the network by a master device.

1 Master: One point of the network with its own address.
n slaves: Other points each with a different address.
Example: a controller will be associated to a master modem and its remote inputs associated to slave modems.

- **Operating mode**

a/ The master scans all the addresses by a poll, asking each device in turn if it has data to transmit (scanning by rotation or by priority).
Whatever the location of the master in the scanning, it can send a message to the recipient of its choice. This message must at least contain the address of the recipient.

b/ The response from the slaves is either “nothing to transmit” or the data to be transmitted.
It is recommended to allow a time limit to reply (time-out).
Transmission from slave to master possible only if the device is polled by the master. The message contains the address of the recipient which can be either the master or another slave. In the latter case, the master then transmits this message to its final recipient.

This protocol can be enhanced by adding after each message a wait for acknowledgementby the recipient of the message, requests to repeat in case of incomplete receipts etc.

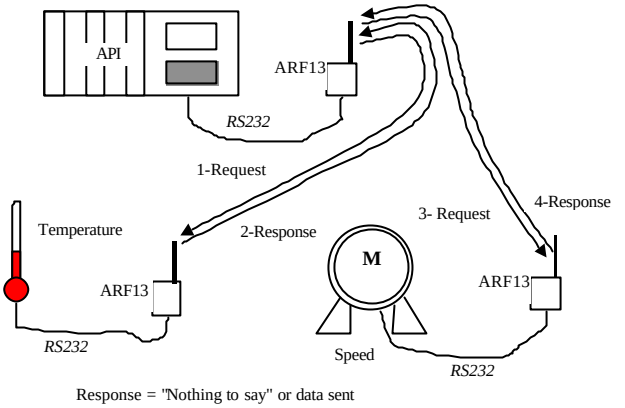

- Application example:

D Timing diagrams.

The signals on the ARF6513B modems (TTL) are inverted with respect to the timing diagrams below. The +12V becomes 0V and the -12V becomes +5V.

Fixed length radio frames: 98 ms.
Under 20 characters: transmission triggered by expiry of a time delay of 11.5 characters.
Over 20 characters: automatic triggering of transmission.

- On power-up, the microcontroller is only active after 200 ms.
- With no flow control a minimum of 150 ms is required between the packets of bytes on the RS232 link.

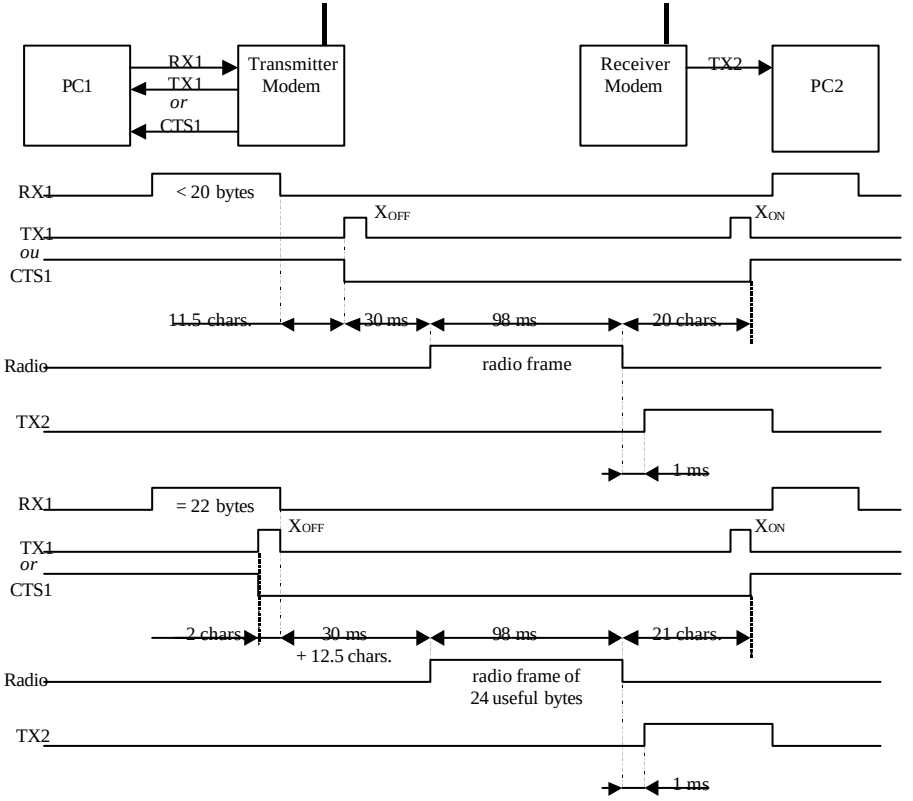

E Mechanical definition

PCB :

: **DO NOT MEASURE ANYTHING ON THIS DRAWING**

(The dimensions below are given in millimetres)

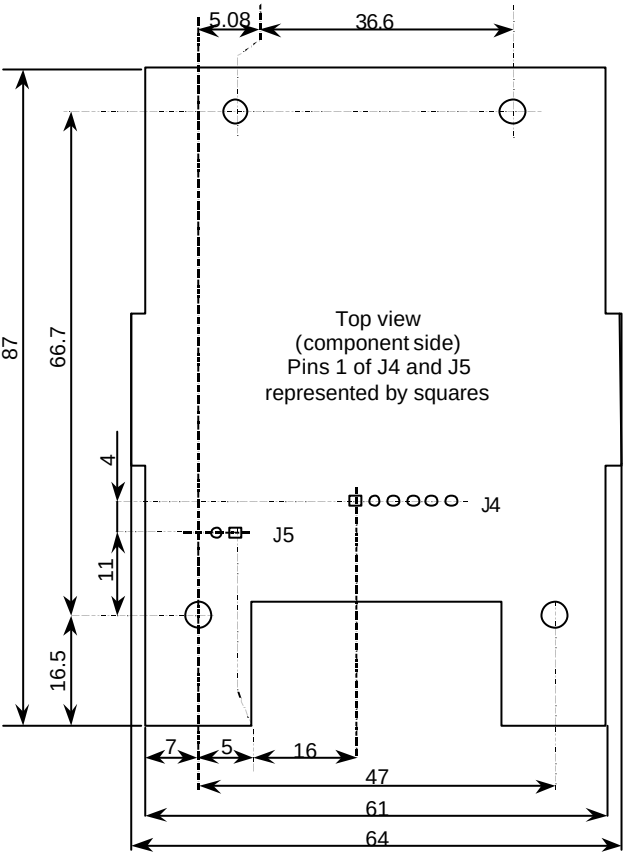

F Technical data.

Temperature range:	-20 / +70°C.
Power supply:	+5.5V to +24V.
Consumption:	25 mA (receipt) 40 mA (transmission)
Carrier:	433.92 MHz
Radiated power:	< 10 mW
Sensitivity:	2 µV
Modulation:	2-FSK at +/-20 kHz.
Frame length:	24 useful bytes
Receipt check:	checksum on 2 bytes
RS 232 link:	Standardised 9-pin female connector
	9600 bauds, 8 data bits, no parity, 1 stop bit.
or	9600 bauds, 7 data bits, even parity, 1 stop bit.
or	9600 bauds, 7 data bits, odd parity, 1 stop bit.
or	9600 bauds, 7 data bits, parity at 1 (Mark), 1 stop bit.
or	9600 bauds, 7 data bits, parity at 0 (Space), 1 stop bit.
Flow control:	Software (X_{ON}/X_{OFF}), hardware (RTS/CTS), or none.
wiring:	internal looping of the CD, DTR and DSR circuits

References:

ARF6513A	RS232 radio modem daughter board with +12/-12V link
ARF6513B	RS232 TTL radio modem daughter board with 0/5V link
ARF4513C	IP65 complete enclosure RS232 radio modem
ARF6513Y	Straight subD9 connecting cable for IP65 modem

Overall dimensions:

ARF6513A	86 x 60 x 25 mm.
ARF6513B	86 x 60 x 25 mm.
ARF6513C	260 x 70 x 30 mm.