Industrial terminal
HTC65iT

rev1.1

powered by CINTERION WIRELESS MODULES

Contents

Document history

Preceding document: "Industrial terminal HTC65iT rev1.0"
New document: "Industrial terminal HTC65iT rev 1.1"

Chapter	What is new
---	Added new pictures, electrical and mechanical characteristics

1. Introduction

This document describes the hardware of DDS Industrial terminal HTC65iT, with interface specifications, electrical and mechanical characteristics.
HTC65iT
industrial terminal is intented to use in variety of M2M applications as a standalone (or control via other host system) control device.

1.1 Related documents

[1] TC65i AT command set
[2] TC65i Hardware interface description
[3] "Programmer To Programmer instruction V3.2" DDS
[4] JAVA UsersGuide v19 - cinterion

1.2 Terms and Abbreviations

Abbreviation	Description
ADC	Analog-to-Digital Converter
ARP	Antenna Reference Point
ASIC	Application Specific Integrated Circuit
ATC	AT Cellular
BTS	Base Transceiver Station
CB	Cell Broadcast
CODEC	Coder-Decoder
CPU	Central Processing Unit
DCE	Data Circuit terminating Equipment
DSP	Digital Signal Processor
DSR	Data Set Ready
DTR	Data Terminal Ready
EFR	Enhanced Full Rate
EGSM	Enhanced GSM
EMC	Electromagnetic Compatibility
ESD	Electrostatic Discharge
ETS	European Telecommunication Standard
FDMA	Frequency Division Multiple Access
FR	Full rate
G.C.F.	GSM Conformity Forum
GSM	Global Standard for Mobile Communication
HF	Hands-free
HR	Half rate
HW	Hardware
IC	Integrated Circuit
IF	Intermediate Frequency
IMEI	International Mobile Equipment Identifier
I/O	Input/ Output
IGT	Ignition
ISO	International Standards Organization
ITU	International Telecommunications Union
kbps	kbits per second
Li-Ion	Lithium-Ion
LVD	Low voltage Directive
Mbps	Mbits per second
MMI	Machine Machine Interface
MO	Mobile Originated
MS	Mobile Station
MT	Mobile Terminated
NC	Not Connected
NTC	Negative Temperature Coefficient
PA	Power Amplifier
PCB	Printed Circuit Board
PCM	Pulse Code Modulation
PCS	Personal Communication System

Abbreviation	Description
PDU	Protocol Data Unit
R&TTE	Radio and Telecommunication Terminal Equipment
RAM	Random Access Memory
RF	Radio frequency
RI	Ring Indication
ROM	Read Only Memory
RX	Receive direction
SIM	Subscriber Identification Module
SMS	Short Message Service
SRAM	Static Random Access Memory
SW	Software
TDD	Time Division Duplex
TDMA	Time Division Multiple Access
TX	Transmit direction
UART	Universal Asynchronous Receiver and Transmitter
VAD	Voice Activity Detection
ZIF	Zero Insertion Force

Table 1. *Terms and Abbreviations*

1.3 Safety Precautions

Safety precautions must be observed during all phases of the operation, usage, service or repair of any cellular terminal from D-D-S.nl

Failure to comply with these precautions violates safety standards of design, manufacture and intended use of the product. D-D-S.nl assumes no liability for customer's failure to comply with these precautions.

	When in hospitals or other health care facilities, observe the restrictions on the use of mobiles. Switch off the cellular terminal or mobile if to be instructed to do so by the guidelines posted in sensitive areas. Medical equipment may be sensitive to RF energy. The operation of cardiac pacemakers, other implanted medical equipment and hearing aids can be affected by interference from cellular terminals or mobiles placed close to the device. If in doubt about potential danger, contact the physician or the manufacturer of the device to verify that the equipment is properly shielded. Pacemaker patients are advised to keep their hand-held mobile away from the pacemaker, while it is on. This personal subgroup always should check the distance to the mobile
	Switch off the cellular terminal or mobile before boarding an aircraft. Make sure it cannot be switched on inadvertently. The operation of wireless appliances in an aircraft is forbidden to prevent interference with communications systems. Failure to observe these instructions may lead to the suspension or denial of cellular services to the offender, legal action, or both. Check the local and actual laws about these themes.
	Do not operate the cellular terminal or mobile in the presence of flammable gases or fumes. Switch off the cellular terminal when you are near petrol stations, fuel depots, chemical plants or where blasting operations are in progress. Operation of any electrical equipment in potentially explosive atmospheres can constitute a safety hazard.
	Your cellular terminal or mobile receives and transmits radio frequency energy while switched on. Remember that interference can occur if it is used close to TV sets,radios, computers or inadequately shielded equipment. Follow any special regulations and always switch off the cellular terminal or mobile wherever forbidden, or when you suspect that it may cause interference or danger.
	Road safety comes first! Do not use a hand-held cellular terminal or mobile while driving a vehicle unless it is securely mounted in a holder for speakerphone operation. Before making a call with a hand-held terminal or mobile park the vehicle. Speakerphones must be installed by qualified personnel. Faulty installation or operation can constitute a safety hazard. Check the actual and local laws about these themes.
 	**IMPORTANT!** Cellular terminals or mobiles operate using radio signals and cellular networks. In that case connections cannot be guaranteed at all times under all conditions. Therefore, you should never rely solely upon any wireless device for essential communications, for example emergency calls. Remember, in order to make calls or receive calls the cellular terminal or mobile must be switched on in a service area with adequate cellular signal strength. Some networks do not allow for emergency calls if certain network services or phone features are in use (e.g. lock functions, fixed dialing etc.). You may need to deactivate those features before you can make an emergency call. Some networks require a valid SIM card to be properly inserted in the cellular terminal or mobile.
	If a power supply unit is used to supply the device it must meet the demands placed on SELV circuits in accordance with EN60950. The maximum permissible connection length between the device and the supply source should not exceed 3m.
	According to the guidelines for human exposure to radio frequency energy, an antenna connected to the FME jack of the device should be placed at least 20cm away from human bodies.

2. Packaging

The package content of the Industrial terminal HTC65iT consist of:

- HTC65iT terminal
- package box

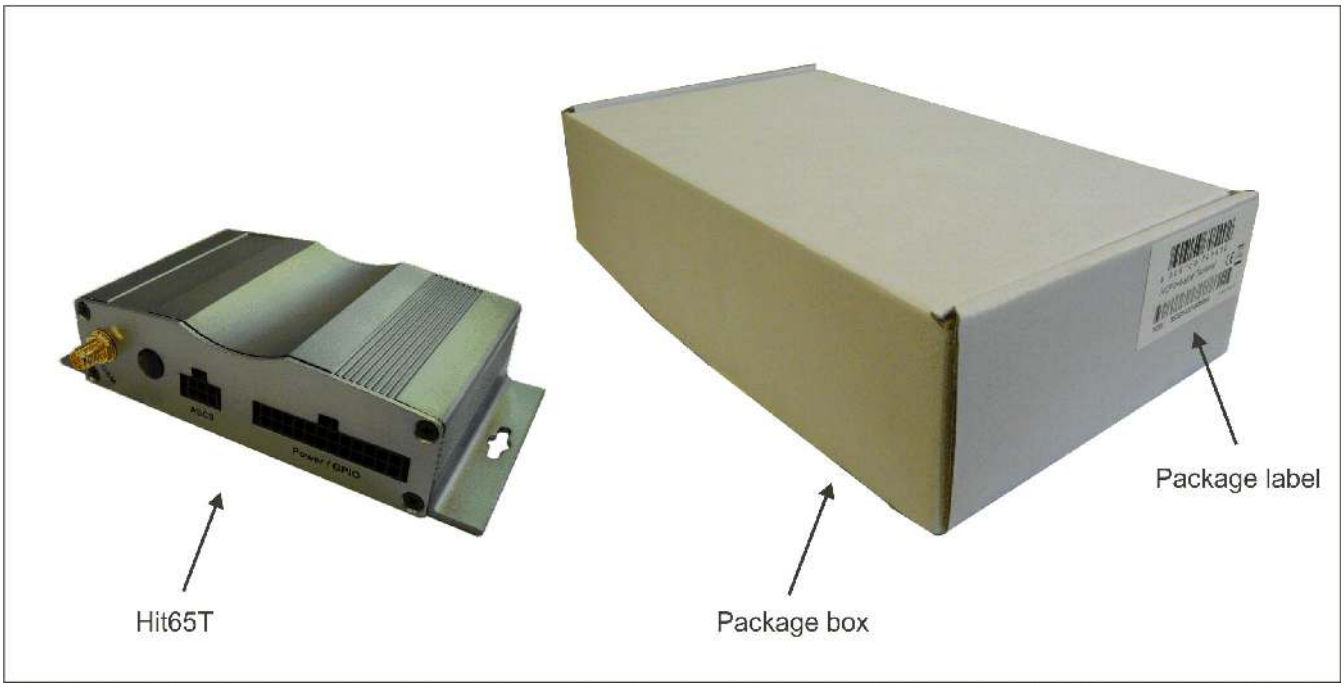

***Figure 1**. Package contents*

Packaging box is a carton box with following dimensions:

- width: 135 mm
- height: 62 mm
- length: 246 mm

Package label is on the carton box and contains information:

- name of the product
- barcode of the product
- IMEI of GSM module

Also, this label with same information is placed on the back side of HTC65iT terminal.

3. Product Concept

3.1 Key Features at a Glance

Feature	Implementation
General	
Incorporates Cinterion TC65i module	The TC65i module handles all processing for signal and data within the HTC65iT Terminal.
Frequency bands	Quad band: GSM 850/900/1800/1900MHz
GSM class	Small MS
Output power (according to Release 99)	Class 4 (+33dBm ±2dB) for EGSM850 Class 4 (+33dBm ±2dB) for EGSM900 Class 1 (+30dBm ±2dB) for GSM1800 Class 1 (+30dBm ±2dB) for GSM1900 The values stated above are maximum limits. According to Release 99, the maximum output power in a multislot configuration may be lower. The nominal reduction of maximum output power varies with the number of uplink timeslots used and amounts to 3.0dB for 2Tx, 4.8dB for 3Tx and 6.0dB for 4Tx.
Power supply	Single supply voltage 8V to 30V DC
Ambient operating temperature according to IEC 60068-2	Normal operation: -30°C to +65°C Restricted operation: +65°C to +75°C, -30°C to -40°C
Physical	Dimensions: 68.7mm x 29.4mm x 129mm Weight: approx. 120 g
RoHS	All hardware components fully compliant with EU RoHS Directive
GSM/GPRS features	
Data transfer	GPRS: • Multislot Class 12 • Full PBCCH support • Mobile Station Class B • Coding Scheme 1 – 4 CSD: • V.110, RLP, non-transparent • 2.4, 4.8, 9.6, 14.4kbps • USSD PPP-stack for GPRS data transfer
SMS	Point-to-point MT and MO Cell broadcast Text and PDU mode Storage: SIM card plus 25 SMS locations in mobile equipment Transmission of SMS alternatively over CSD or GPRS. Preferred mode can be user defined.
Fax	Group 3; Class 1

Feature	Implementation
Software	
AT commands	Hayes 3GPP TS 27.007, TS 27.005, Cinterion
Java platform	Java Virtual Machine with APIs for AT Parser, Serial Interface, FlashFile-System and TCP/IP Stack. Major benefits: seamless integration into Java applications, ease of programming, no need for application microcontroller, extremely cost-efficient hardware and software design – ideal platform for industrial GSM applications. The memory space available for Java programs is around 1.7 MB in the flash file system and around 400k RAM. Application code and data share the space in the flash file system and in RAM.
SIM Application Toolkit	SAT Release 99
TCP/IP stack	Access by AT commands
Remote SIM Access	TC65i supports Remote SIM Access. RSA enables TC65i to use a remote SIM card via its serial interface and an external application, in addition to the SIM card locally attached to the dedicated lines of the application interface. The connection between the external application and the remote SIM card can be a Bluetooth wireless link or a serial link. The necessary protocols and procedures are implemented according to the “SIM Access Profile Interoperability Specification of the Bluetooth Special Interest Group”.
Firmware update	Generic update from host application over ASC0.
Interfaces	
Serial interface	RS-232 interface, bi-directional bus for AT commands and data. • 6-wire modem interface (RxD,TxD,CTS,RTS,DTR,GND) • Adjustable baud rates: 300 bps to 921,600 bps • Autobauding: 1,200 bps to 460,800 bps • Supports RTS/CTS hardware handshake and software XON/XOFF flow control • Multiplex ability according to GSM 07.10 Multiplexer Protocol.
SIM interface	Supported SIM cards: 3V, 1.8V
Antenna	Connected via antenna SMA connector
Power on/off, Reset	
Power on	• Automatic switch on when power supply is attached • DTR line at RS232 interface
Power off	• Normal switch-off by AT^SMSO command • Emergency switch-off via Jumper on board (EMERG_OFF pin on HTC65iT pcb) • Automatic switch-off in case of critical temperature and voltage conditions
Reset	Orderly shutdown and reset by AT command

Digital I/O, analog inputs and phonebook	
Digital inputs	4 optoisolated digital inputs Programming is done via AT commands.
Digital outputs	4 optoisolated digital outputs Programming is done via AT commands.
ADC inputs	2 analog inputs
Features	
Watchdog	Integrated watchdog timer for resetting HTC65iT
Phonebook	SIM card and phone

4. Interface Description

4.1 Overview

HTC65iT provides the following connectors for power supply, communication interface and antenna:

1. SMA antenna connector for GSM
2. Molex Micro-fit 6-pin connector for ASC0 interface (RS232)
3. Molex Micro-fit 24-pin connector for power supply, input/output pins as well as analog inputs
4. SIM card holder

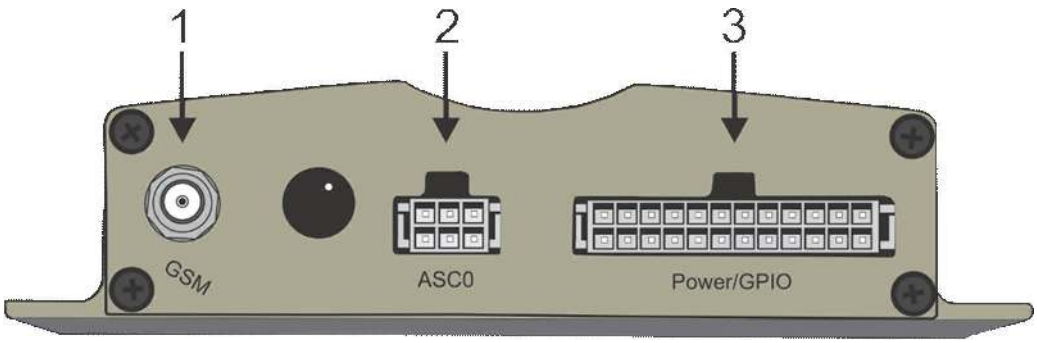

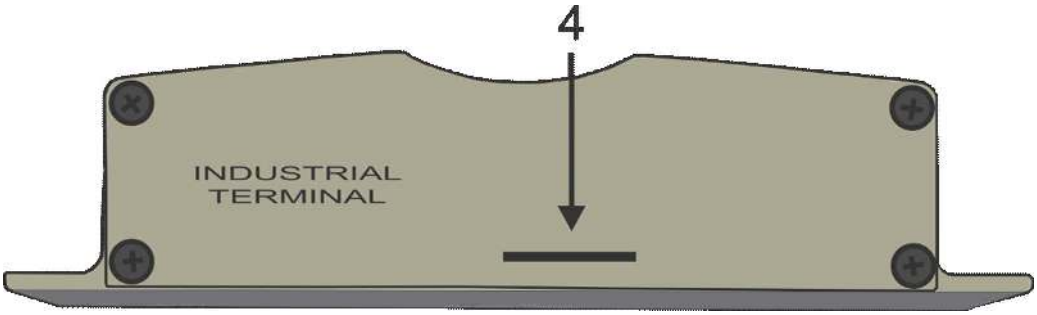

4.2 Block diagram

Figure 3. shows a block diagram of industrial terminal HTC65iT with interfaces.

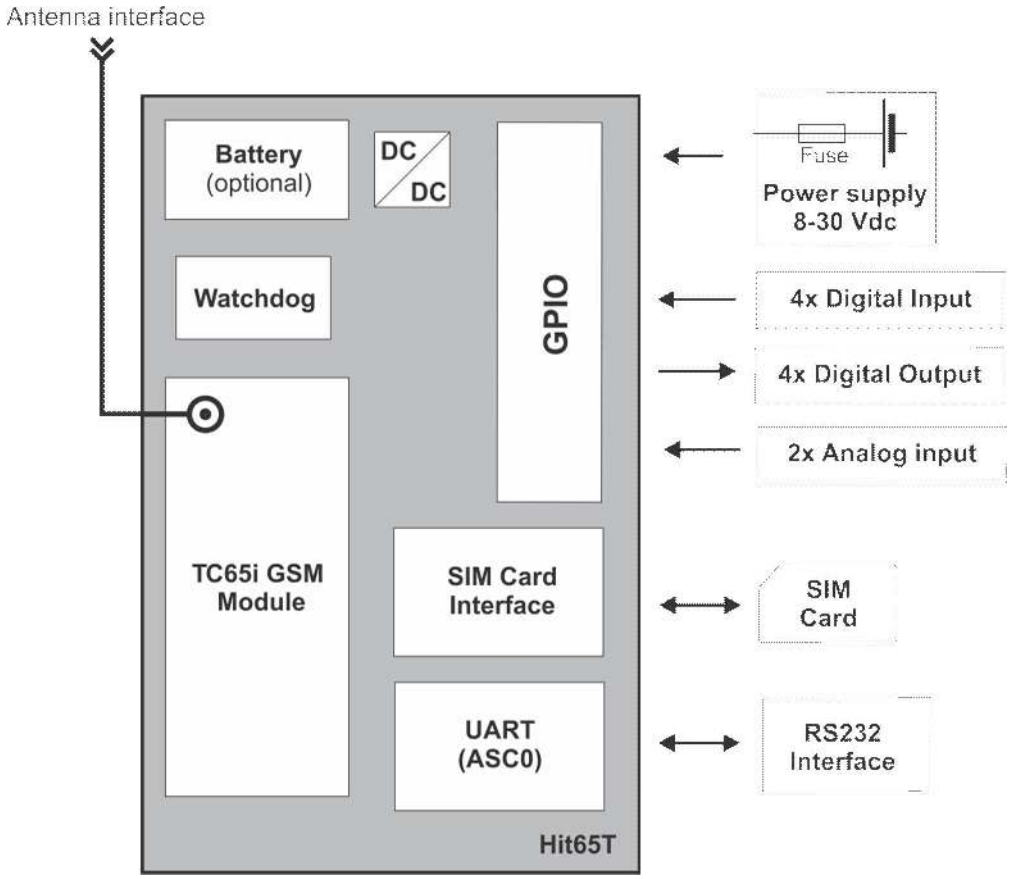

4.3 Operating Modes of GSM module in Hit65T

Mode	Function	
Normal operation	GSM/GPRS SLEEP	Various powersave modes set with AT+CFUN command. Software is active to minimum extent. If the module was registered to the GSM network in IDLE mode, it is registered and paging with the BTS in SLEEP mode, too. Power saving can be chosen at different levels: The NON-CYCLIC SLEEP mode (AT+CFUN=0) disables the AT interface. The CYCLIC SLEEP modes AT+CFUN=7 and 9 alternatingly activate and deactivate the AT interfaces to allow permanent access to all AT commands.
	GSM IDLE	Software is active. Once registered to the GSM network, paging with BTS is carried out. The module is ready to send and receive.
	GSM TALK	Connection between two subscribers is in progress. Power consumption depends on network coverage individual settings, such as DTX off/on, FR/EFR/HR, hopping sequences, antenna.
	GPRS IDLE	Module is ready for GPRS data transfer, but no data is currently sent or received. Power consumption depends on network settings and GPRS configuration (e.g. multislot settings).
	GPRS DATA	GPRS data transfer in progress. Power consumption depends on network settings (e.g. power control level), uplink / down-link data rates and GPRS configuration (e.g. used multislot settings).
POWER DOWN	Normal shutdown after sending the AT^SMSO command. Software is not active, RS232 interface is not accessible, operating voltage on GSM module remains applied.	

Table 3. *Operating modem of TC65i module*

For more information about operating modes of TC65i module please refer to [1] and [2].

4.4 Power supply

Power supply for HTC65iT has to be single voltage source from +8V to +30V DC, capable of providing a peak current of 1.6 A at 12V during an active transmissions. The uplink burst causes strong ripple (drop) on the power lines. The drop voltage should not exceed 1V, but the absolute minimum voltage during drops must be >7.6V. The HTC65iT is protected from supply voltage reversal connection.

Power supply is applied to HTC65iT trough 24-pin connector, pin 13 – Vcc and pin 1 – GND.

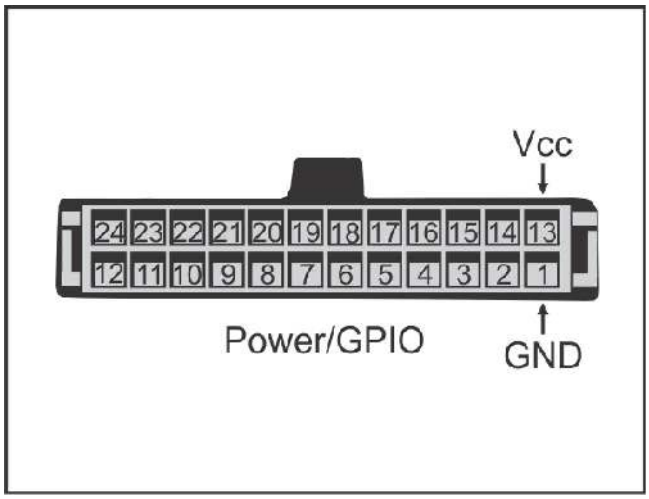

Figure 5. *Pins for power supply on 24-pin connector*

Pin	Singal name	Use	Parameters
1	GND	Ground	0V
13	Vcc	Positive power supply	8V – 30V DC

Table 4. *Power supply ratings*

4.4.1 Turn Hit65T on

HTC65iT switches on automaticly when power supply is attached. After start-up, the HTC65iT enters the net searching state.

Also, if HTC65iT is switched off over AT command AT^SMSO, you can turn it on by activating the DTR line on RS232 interface.

After startup of the HTC65iT the RS232 lines are in an undefined state for approx. 900ms. This may cause undefined characters to be transmitted over the RS232 lines during this period.

4.4.2 Reset Hit65T

One way to reset HTC65iT is entering AT command AT+CFUN=0,1. For details on AT+CFUN please see [1], [2].

Other ways for restarting HTC65iT is:

- automatically by integrated watchdog timer on every 10 minutes if watchdog timer doesn't receive reset impulse

4.4.3 Turn off Hit65T GSM module

Normal shutdown:

- To turn off the HTC65iT GSM module use the AT^SMSO command, rather than disconnecting the power supply adapter.

This procedure lets the HTC65iT log off from the network and allows the software to enter a secure state and save data before disconnecting the power supply. After AT^SMSO has been entered the HTC65iT GSM module returns the following result codes:

^SMSO: MS OFF
OK
^SHUTDOWN

The "^SHUTDOWN" result code indicates that the HTC65iT GSM module turns off in less than 1 second. After the shutdown procedure is complete the HTC65iT enters the POWER DOWN mode.

Emergency shutdown (reset)

- In the event of software hang-ups etc. the HTC65iT can be switched off by putting jumper directly on PCB for few seconds.

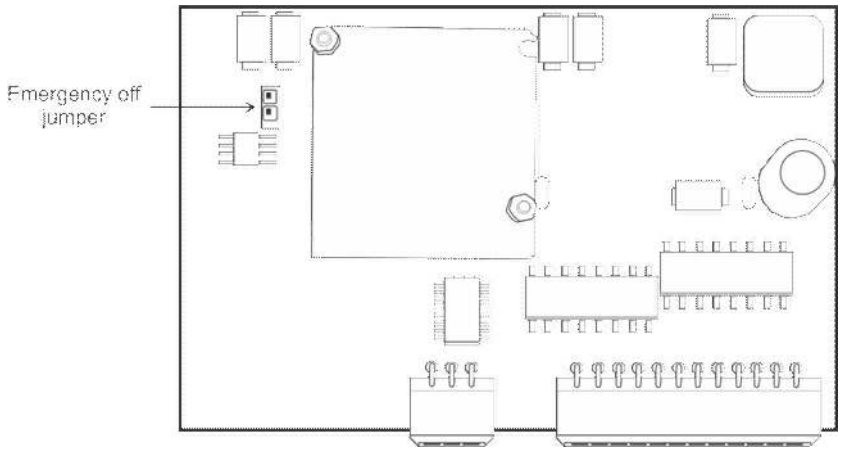

4.4.5 Automatic shutdown

Automatic shutdown takes effect if:

- the TC65i GSM module is exceeding the critical limits of overtemperature or undertemperature
- undervoltage or overvoltage is detected

The automatic shutdown procedure is equivalent to the Power-down initiated with the AT^SMSO command, i.e. TC65i logs off from the network and the software enters a secure state avoiding loss of data.
Alert messages transmitted before the device switches off are implemented as Unsolicited Result Codes (URCs). The presentation of these URCs can be enabled or disabled with the two AT commands AT^SBC and AT^SCTM. The URC presentation mode varies with the condition. For further instructions on AT commands refer to [1].

The board temperature is constantly monitored by an internal NTC resistor located on the PCB. The values detected by either NTC resistor are measured directly on the board and therefore, are not fully identical with the ambient temperature.
Each time the board temperature goes out of range or back to normal, TC65i instantly displays an alert (if enabled). For more information about automatic shutdown and thermal shutdown refer to [2].

4.5 Watchdog

HTC65iT has integrated hardware watchdog circuit as a protection if the software on GSM mo-dule TC65i gets stuck.
Watchdog is basically a 10min timer for restarting the module. If the watchdog doesn't receive reset impulse from GSM module GPIO5 before 10min expire then watchdog will reset the GSM module.
Application that runs on GSM module has to give positive impulse on its GPIO5 to reset watchdog before 10min expire to ensure that the watchdog wont reset the GSM module.
Example of reset impulse on every 120seconds is shown on figure 7.

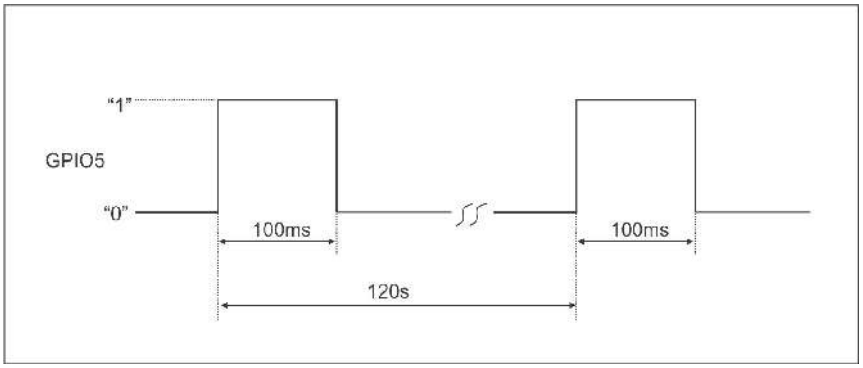

Figure 7. *Impulse on GPIO5*

4.6 Power/GPIO Connector pinout

24-pin connector provide pins for power supply, digital input/output pins and analog inputs.

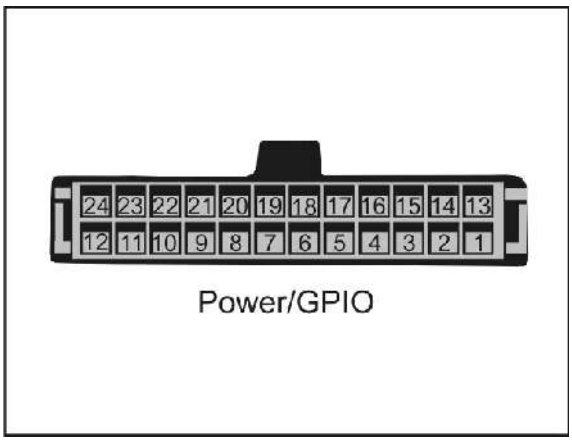

Figure 7. *Molex Micro-fit 24-pin connector*

Pin	Signal name	I/O	Function
1	GND	-	Power supply Ground
2	In1 -	I	Input channel 1 negative inlet
3	In2 -	I	Input channel 2 negative inlet
4	In3 -	I	Input channel 3 negative inlet
5	In4 -	I	Input channel 4 negative inlet
6	Out1 -	O	Output channel 1 negative outlet
7	Out2 -	O	Output channel 2 negative outlet
8	Out3 -	O	Output channel 3 negative outlet
9	Out4 -	O	Output channel 4 negative outlet
10	AGND	-	Analog ground
11	AGND	-	Analog ground
12	NC	-	Not connected
13	Vcc	-	Power supply positive input
14	In1 +	I	Input channel 1 positive inlet
15	In2 +	I	Input channel 2 positive inlet
16	In3 +	I	Input channel 3 positive inlet
17	In4 +	I	Input channel 4 positive inlet
18	Out1 +	O	Output channel 1 positive outlet
19	Out2 +	O	Output channel 2 positive outlet
20	Out3 +	O	Output channel 3 positive outlet
21	Out4 +	O	Output channel 4 positive outlet
22	ADC1	I	Analog channel 1 input
23	ADC2	I	Analog channel 2 input
24	NC	-	Not connected

Table 5. *Molex Micro-fit 24-pin connector pinout*

4.7 RS232 interface

Host controller controls the HTC65iT and transports data via RS232 interface.

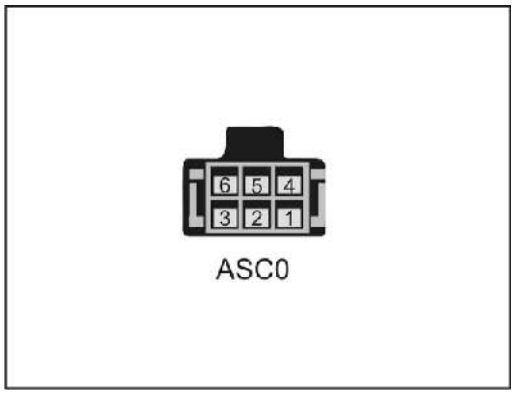

Figure 8. *Pin assignment for RS232 (*Molex Micro-fit 6-pin)

Pin	Signal name	I/O	Function
1	GND	-	Ground
2	RxD	O	Receive Data
3	TxD	I	Transmit Data
4	RTS	I	Request To Send
5	CTS	O	Clear to Send
6	DTR	I	Data Terminal Ready Ignition of HTC65iT is activated over rising edge of high potential (+3 … +15V)

Table 6. *Molex Micro-fit 6-pin pinout*

The RS-232 interface is implemented as a serial asynchronous transmitter and receiver conforming to ITU-T V.24 Interchange Circuits DCE. It is configured for 8 data bits, no parity and 1 stop bit, and can be operated at bit rates from 300bps to 921600kbps. Autobauding supports bit rates from 1200bps to 460800bps. Hardware handshake using the /RTS and /CTS signals and XON/XOFF software flow control are supported.

There are different modes of operation, which can be set with AT commands, refer to [1].

4.8 SIM interface

The SIM interface is intended for 1.8V and 3V SIM cards. The card holder is a five wire interface according to GSM 11.11. A sixth pin has been added to detect whether or not a SIM card is inserted.

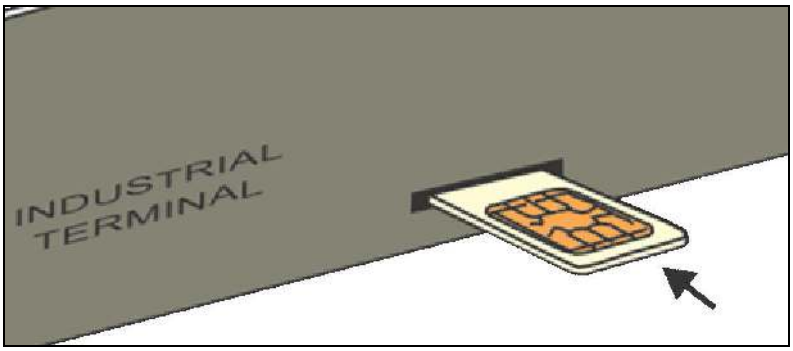

Figure 9. *SIM interface.*

Removing and inserting the SIM card during operation requires the software to be reinitialized. Therefore, after reinserting the SIM card it is necessary to restart HTC65iT.

Note*: No guarantee can be given, nor any liability accepted, if loss of data is encountered after removing the SIM card during operation. Also, no guarantee can be given for properly initializing any SIM card that the user inserts after having removed a SIM card during operation. In this case, the application must restart Hit65T.*

4.9 Antenna interface

The external antenna is connected via the HTC65iT SMA jack (female), look at figure 10.

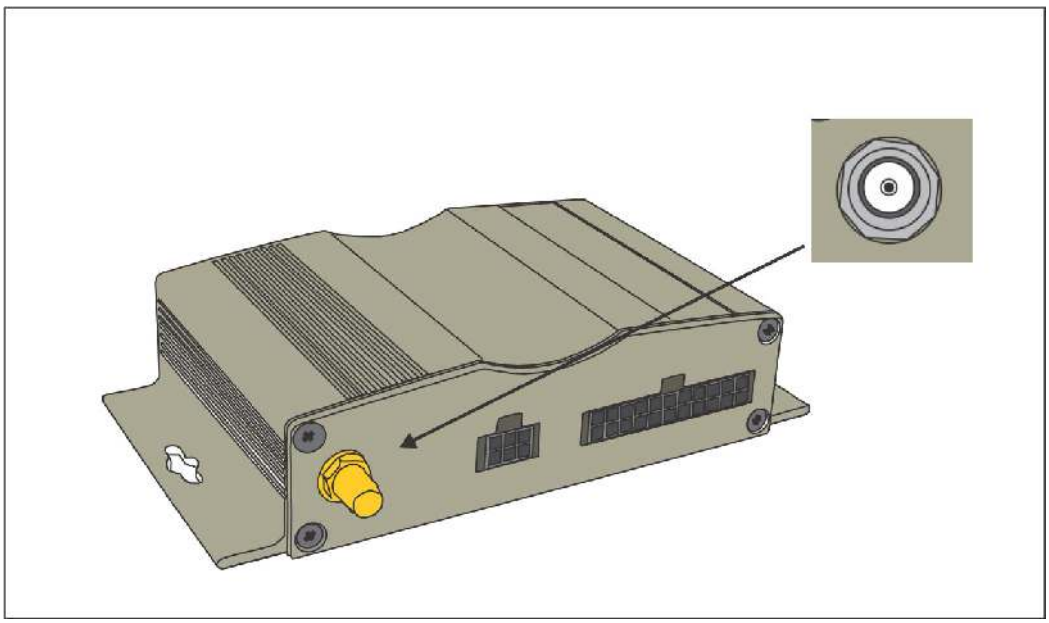

Figure 10. *Antenna interface - SMA*

An internal antenna cable adapts the antenna reference point (antenna connector type U.FL-R-SMT from Hirose) to the SMA (female) connector.

- Cable loss of the internal cable
  <0.4dB @ 900MHz
  <0.6dB @ 1800MHz
- The system impedance is 50Ω
- In every case, for good RF performance the return loss of the customer application's antenna should be better than 10dB (VSWR < 2).

- HTC65iT GSM module withstands a total mismatch at this connector when transmitting with power control level for maximum RF power.

4.10 Digital inputs

All digital inputs on HTC65iT are optoisolated. Each channel has two pins for connection, positive and negative input, and each channel is reverse polarity protected look at the figure 11.

High voltage level on input is read as “0” by TC65i module pin, low voltage on input is read as “1” by TC65i pin.

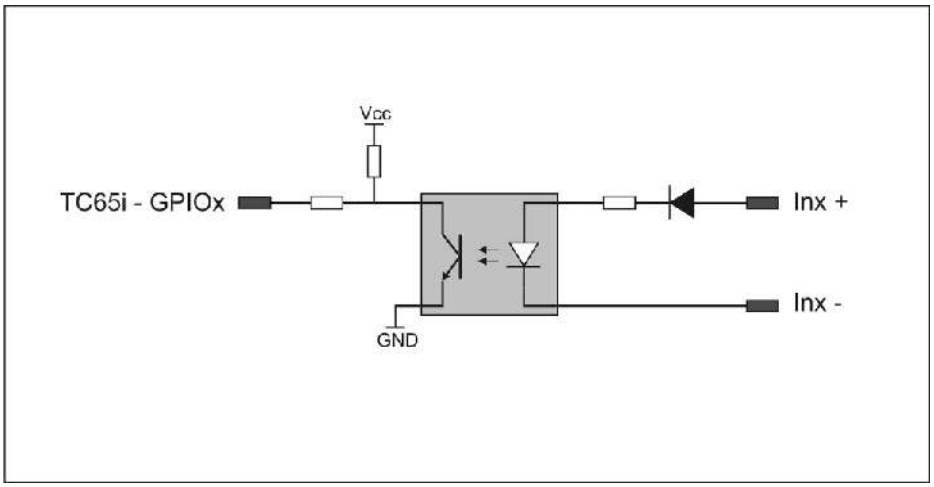

Figure 11. *Digital inputs schematic*

Pin on 24-pin connector	Input	TC65i GPIO pins
14	In1 +	GPIO1
2	In1 -	
15	In2 +	GPIO2
3	In2 -	
16	In3 +	GPIO3
4	In3 -	
17	In4 +	GPIO10
5	In4 -	

Table 7. *Digital input pins on Hit65T and TC65i GPIO pins*

Parameter	Description	Min	Typ	Max	Unit
Rin	Input resistance	8	10	12	kΩ
V_{inmax}	Maximum input voltage			30	V
V_{inlow}	Input threshold low	0		2	V
V_{inhigh}	Input threshold high	5	6	24	V

Table 8. Digital inputs characteristics

4.11 Digital outputs

All digital outputs on HTC65iT are open collector optoisolated. Each channel has two pins for connection, positive and negative output, look at the figure 12.

When you send “1” on desired GPIO pin this provides closed output transistor, and “0” provides open output transistor.

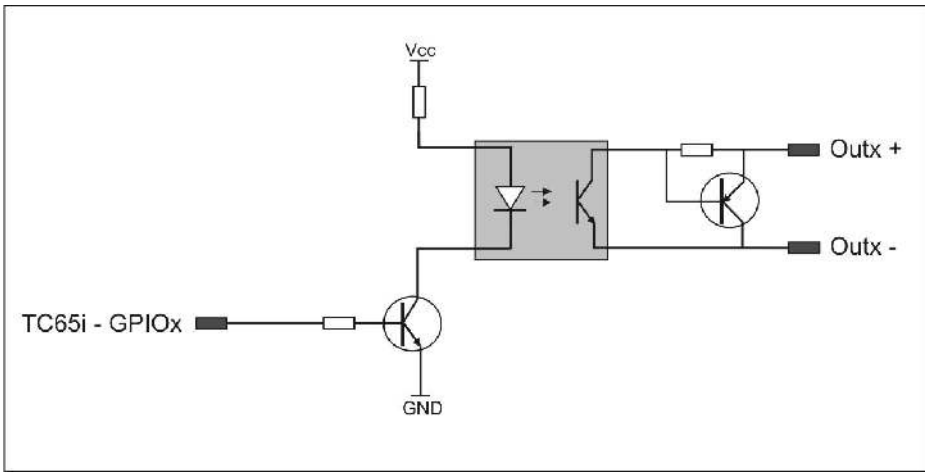

Figure 12. *Digital outputs schematic*

Pin on 24-pin connector	Output	TC65i GPIO pins
18	Out1 +	GPIO4
6	Out1 -	
19	Out2 +	GPIO7
7	Out2 -	
20	Out3 +	GPIO8
8	Out3 -	
21	Out4 +	GPIO6
9	Out4 -	

Table 9. *Digital output pins on Hit65T and TC65i GPIO pins*

Parameter	Description	Min	Typ	Max	Unit
V_{cesat}	Max collector-emitter saturation voltage	-	-	700	mV
V_{ceo}	Maximum collector-emitter voltage	-	-	45	V
I_{out}	Max sink current	-	-	300	mA

Table 10. Digital outputs characteristics

4.12 Analog inputs

HTC65iT provides two analog inputs that can measure voltage from 0 to 24V DC. Analog inputs of HTC65iT is over resistor network as on the figure 13.Since TC65i module can measure voltage from 0 to 2.4V, over resistor network is achieved that can measure voltages from 0 to 24V DC.

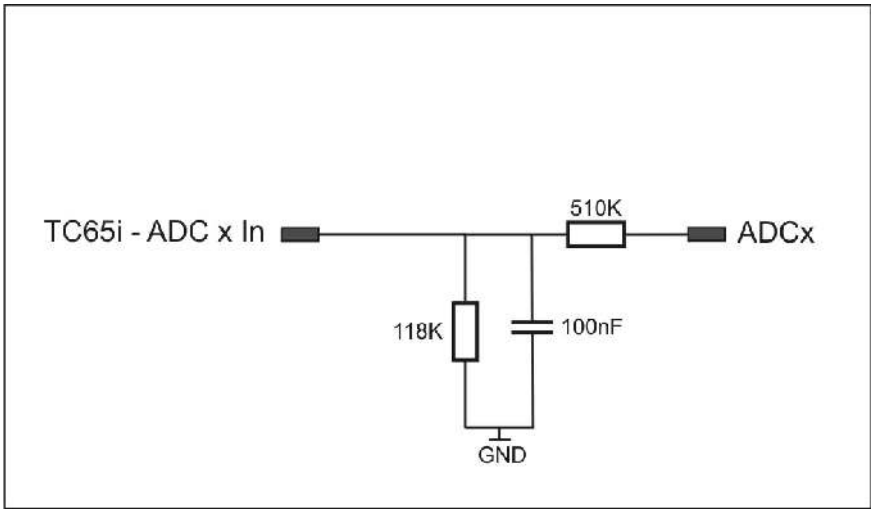

Figure 13. *Analog inputs schematic*

For more information about controlling analog inputs of GSM module please refer to [1].

4.13 Battery (optional)

HTC65iT can get its power supply from battery – 3.6V 700mAh NiMh or from external power supply. If external power supply is attached battery will charge and in case that external power supply is turned off, the HTC65iT will get its power supply over battery.
NiMh battery pack is option.

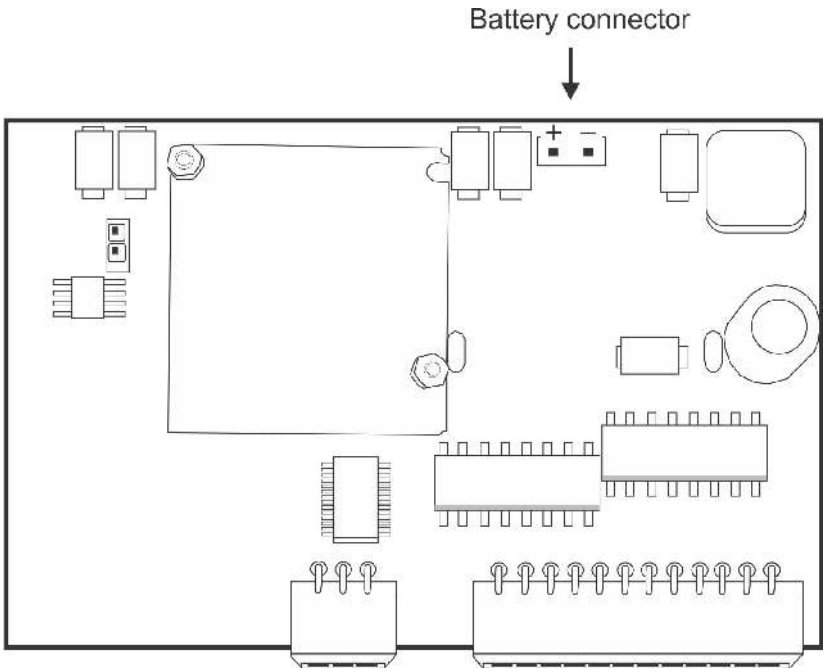

5 Electrical and Environmental Characteristics

5.1 Apsolute Maximum Ratings

Parameter	Pin / Parameter	Min.	Max.	Unit
Supply voltage	Vcc	8	30	V
Supply current	Ic		500	mA
Input voltage on Digital inputs				V
RS232 input voltage range	TxD, DTR, RTS	-20	+20	V
	RxD, CTS	-0.3	+5.3	V
Immunity against ESD	RS232 LINES	-15	+15	kV
Protection Class	IP50(avoid exposing HTC65iT to liquid or moisture)		IP50	

Table 11. Apsolute maximum ratings

5.2 Recommended Operating conditions

Parameter	Pin / Parameter	Min.	Typ.	Max.	Unit
Supply voltage	Vcc		12		V
Supply current	Ic *		50		mA
Operating temperature	HTC65i	-30	+25	+65	°C

Table 12. Recommended operating conditions

*Ic – power supply must be able to provide 1.6A peak during an active transmissions.

5.3 Storage Conditions

Type	Condition	Unit	Reference
Air temperature: Low High	-40 +85	°C	ETS 300 019-2-1: T1.2, IEC 60068-2-1 Ab ETS 300 019-2-1: T1.2, IEC 60068-2-2 Bb
Humidity relative: Low High Condens.	10 90 at 30°C 90-100 at 30°C	%	--- ETS 300 019-2-1: T1.2, IEC 60068-2-56 Cb ETS 300 019-2-1: T1.2, IEC 60068-2-30 Db
Air pressure: Low High	70 106	kPa	IEC TR 60271-3-1: 1K4 IEC TR 60271-3-1: 1K4
Movement of surrounding air	1.0	m/s	IEC TR 60271-3-1: 1K4
Water: rain, dripping, icing and frosting	Not allowed	---	---
Radiation: Solar Heat	1120 600	W/m²	ETS 300 019-2-1: T1.2, IEC 60068-2-2 Bb ETS 300 019-2-1: T1.2, IEC 60068-2-2 Bb
Chemically active substances	Not recomm.		EC TR 60271-3-1: 1C1L
Mechanically active substances	Not recomm.		IEC TR 60271-3-1: 1S1

Table 13. Storage conditions

The conditions stated above are only valid for devices in their original packed state in weather protected, non-temperature-controlled storage locations. Normal storage time under these conditions is 12 months maximum.

5.4 On/Off Control

Param.	Description	Conditions	Min.	Typ.	Max.	Unit
V_{HIGH}	Input voltage DTR	active high	4		+15	V
V_{LOW}			-15		1.2	V
t_{D_IGT}	Duration of active high DTR		200			ms
t_{D_EOff}	Duration of active high -Emergency_off		50			ms
t_{R_RTS}	Rise time on DTR pin for power up	0 to 100%			20	ms
t_{D_off}	Passive state(low) of DTR pin before restart	after power down	1s			ms

Table 14. On/off control

5.5 RS232 interface

Param.	Description	Conditions	Min.	Typ.	Max.	Unit
V_{OUT}	Transmitter output voltage for RxD, CTS	@3KΩ to GND	±5	±5.4		V
R_{OUT}	Transmitter output resistance RXD, CTS,		300	10M		Ω
R_{IN}	Resistance TxD, DTR		3	5	7	kΩ
V_{IN}	Receiver input voltage range TxD, RTS, DTR		-25		+25	V
V_{LOW}	Input threshold low				0.8	V
V_{HIGH}	Input threshold high		2			
Baudrate		Autobauding	1,200		460800	bps
		Fixed range	300		921600	bps
RS232 cable				1.8	2	m

Table 15. RS232 interface

5.6 Antenna interface

Parameter		Min.	Typ.	Max.	Unit
Frequency range Uplink (MS BTS)	GSM 850	824		849	MHz
	E-GSM 900	880		915	MHz
	GSM 1800	1710		1785	MHz
	GSM 1900	1850		1910	MHz
Frequency range Downlink (BTS MS)	GSM 850	869		894	MHz
	E-GSM 900	925		960	MHz
	GSM 1800	1805		1880	MHz
	GSM 1900	1930		1990	MHz
RF power @ ARP with 50Ω load	GSM 850	31	33	35	dBm
	E-GSM 900	31	33	35	dBm
	GSM 1800	28	30	32	dBm
	GSM 1900	28	30	32	dBm

Table 16. Antena interface

Please refer to [1] and [2] for more information about antenna interface (air interface).

6 Mechanical Characteristics

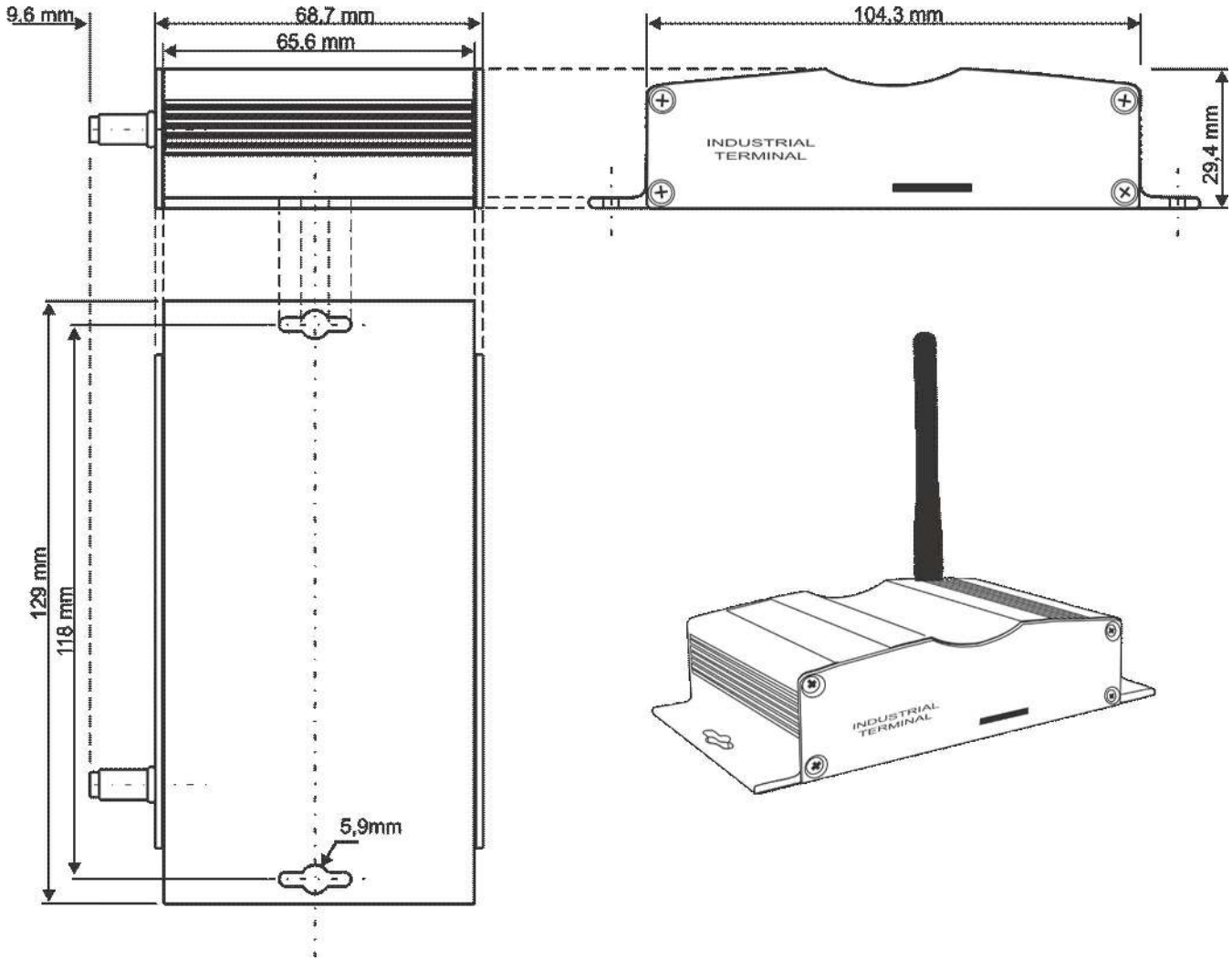

Figure 15. *Mechanical dimensions*